Landing Gear Auto Extend Circuit - Rev. 1
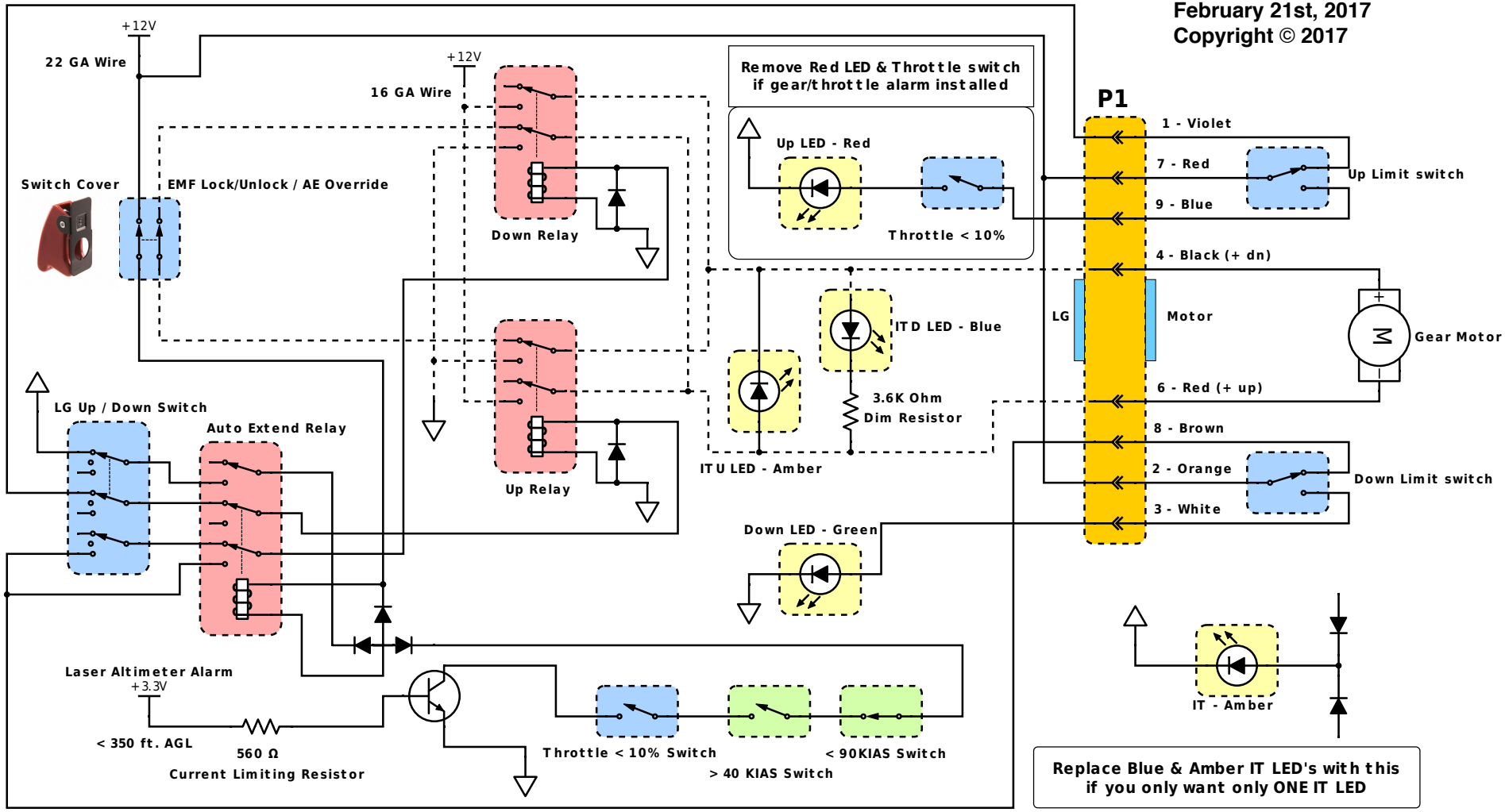
Marc J. Zeitlin
February 21st, 2017
Copyright © 2017